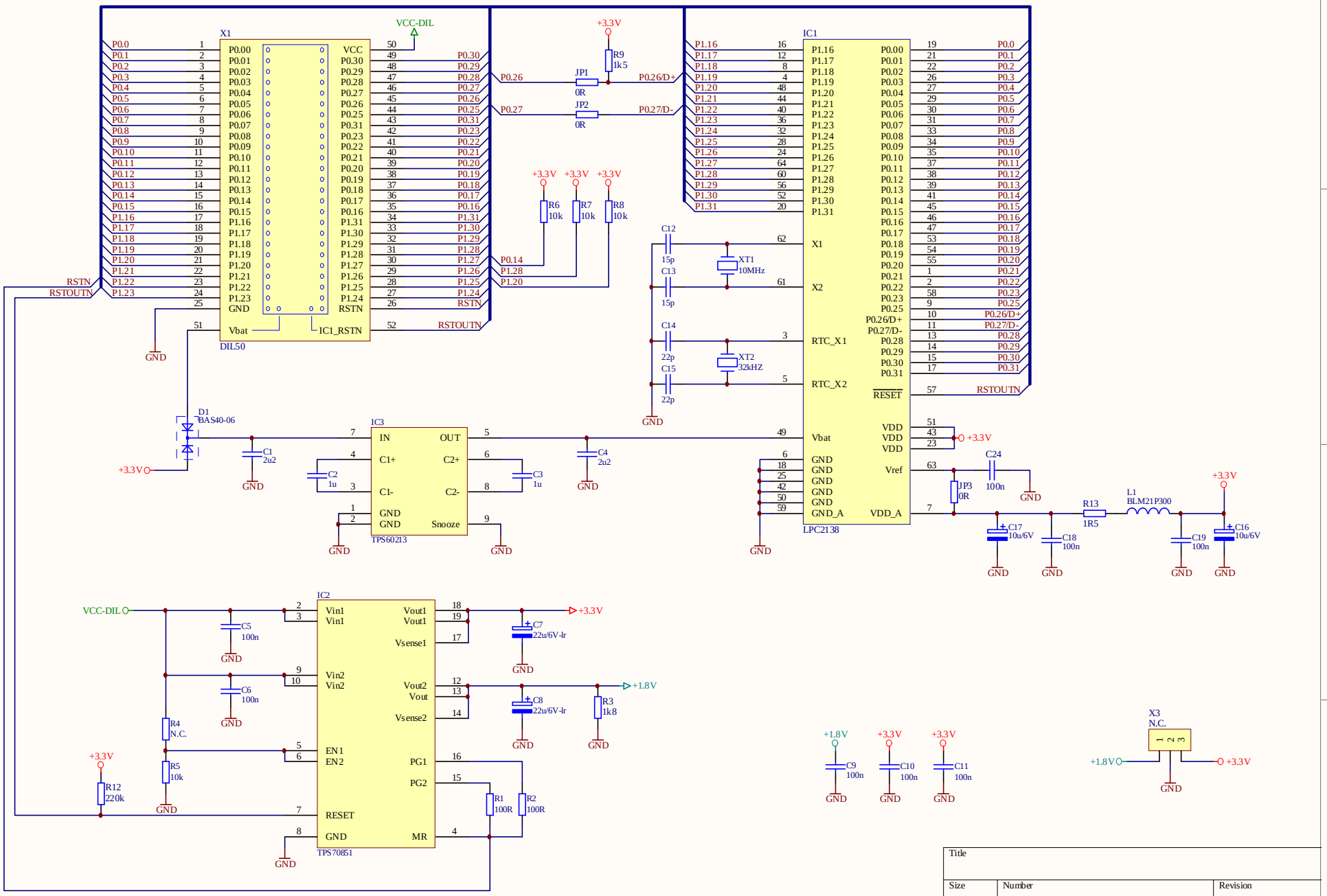

Title		
Size B	Number	Revision
Date: 22.6.2006		Sheet of
File: E:\Archiv\..\PHIL50-38.sch		Drawn By: